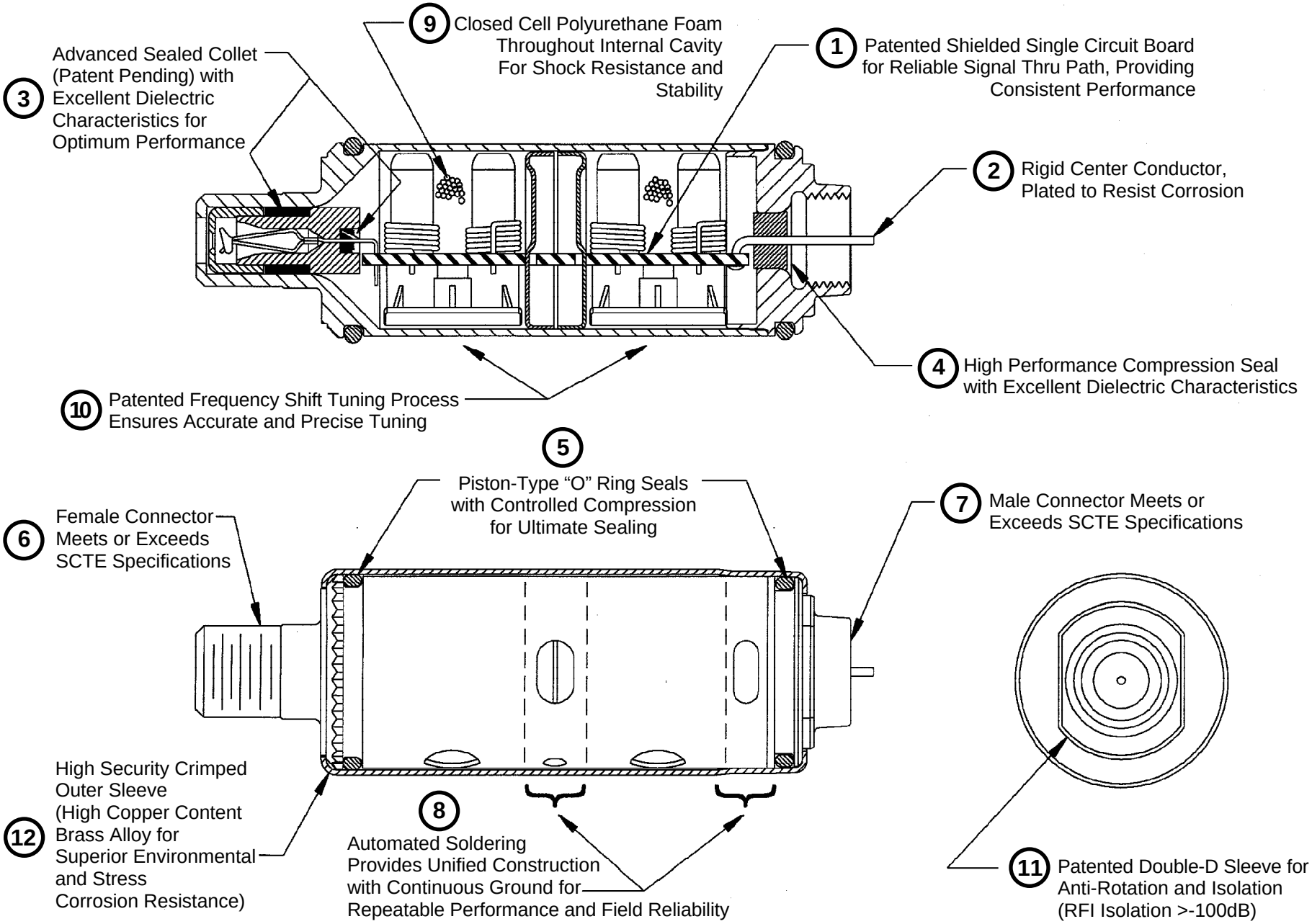QUALITY FEATURES OF THE EAGLE FILTER